italia LIVING
ITALIAN FEELINGS



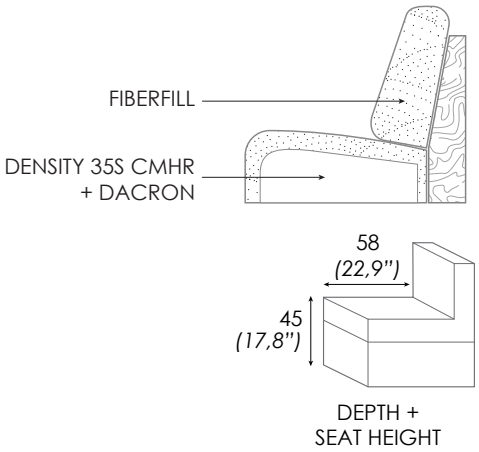

5034 ARENA

Carcass: spruce, chipboard and multilayer panels.
Springing: polypropylene and natural elastic belts on back and nosag springs on seats.
Padding: stress resistant polyurethane foam made up of multiple densities.
Seat cushions: stress-resistant polyurethane density 35S CMHR covered with Dacron.
Back cushions: fiberfill.
Arms: stress-resistant polyurethane density 35S CMHR covered with Dacron.
Feet: wood, h 6 cm *(2,4 in)*.

Cod. 64
Large sofa

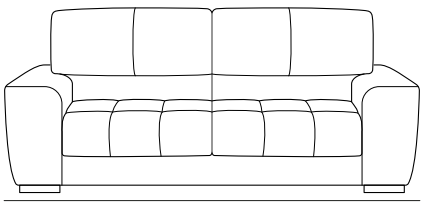

216 (85,1")

Cod. 09
Sofa

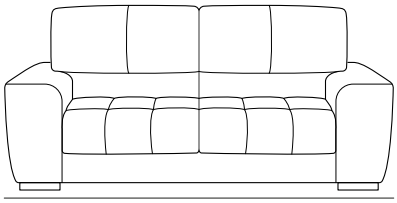

203 (80")

Cod. 05
Loveseat

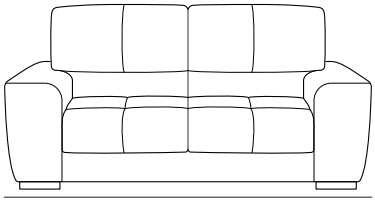

187 (73,7")

Cod. 03
Armchair

